RADTECH INNOVATION

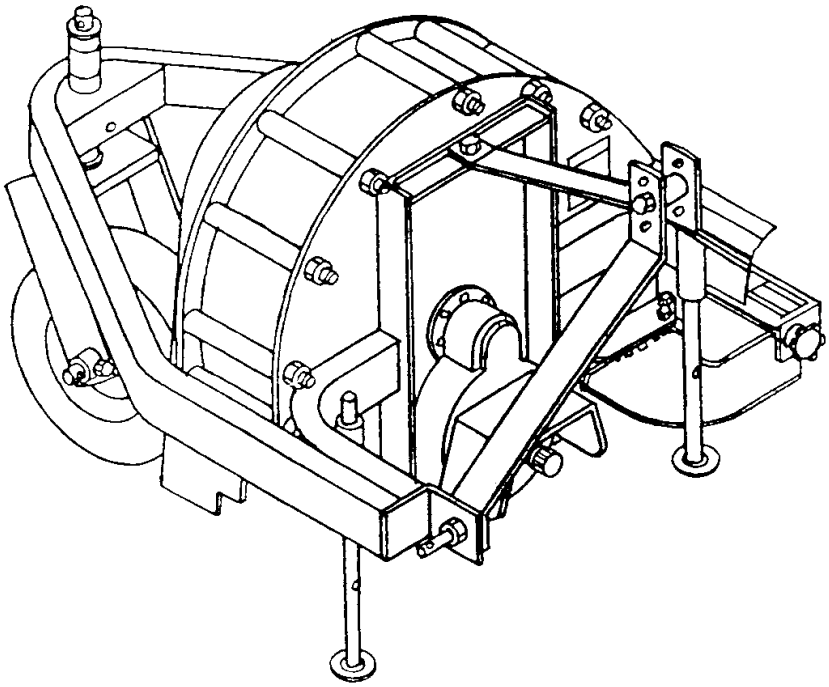

# OPERATOR'S AND PARTS MANUAL

## THREE POINT HITCH DEBRIS BLOWER
## MODEL 9424B
### CATEGORY "B"

**SERIAL NO. 2303888 AND UP**

INTERTEK ISO 9001:2000

OM 0185-A
11/07

# TABLE OF CONTENT

INTRODUCTION – To the Purchaser ..... 3

SAFETY PRECAUTIONS ..... 4

Before Operation ..... 4
Notice ..... 5
The Debris Blower ..... 5
Before Operation ..... 5
Debris Blower Operation ..... 6
The Tractor ..... 7
General Information ..... 7
Operating the Tractor ..... 7
Maintenance ..... 8
Transporting ..... 8
Storage ..... 8

DECALS ..... 9

ASSEMBLY ..... 10
Attaching Debris Blower ..... 10
Determining Driveline Length ..... 10

OPERATION ..... 12
Operating Controls ..... 12
Manual Nozzle Rotation ..... 12
Engaging & Disengaging Blower ..... 12
Optional Hydraulic Nozzle Rotation ..... 12
Optional Electric Nozzle Rotation ..... 12
Adjustments ..... 12
Nozzle Deflector ..... 12
Front Gauge Wheel ..... 12
Air Flow Adjuster ..... 13

# TABLE OF CONTENT

MAINTENANCE ..... 14
Tire Pressure ..... 14
Hydraulic Lines ..... 14
Lubrication ..... 14
Removing Debris Blower ..... 14

PARTS ..... 15
Introduction ..... 15
Three Point Hitch Debris Blower ..... 18
Gearbox (664533) ..... 19
Driveline (4700159) ..... 20

WARRANTY ..... 21

AVAILABLE OPTIONS ..... 22

TORQUE SPECIFICATION TABLE ..... 23

# INTRODUCTION

## TO THE PURCHASER

All products are designed to give safe, dependable service if they are operated and maintained according to instructions. **Read and understand this manual before operation.**

This manual has been prepared to assist the owner and operators in the safe operation and suitable maintenance of the equipment. The information was applicable to products at the time of manufacture and does not include modifications made afterwards.

Read and understand this operator's manual before attempting to put equipment into service. Familiarize yourself with the operating instructions and all the safety recommendations contained in this manual and those labelled on the equipments and on the tractor. Follow the safety recommendations and make sure that those with whom you work follow them.

### *Illustrations*

The illustrations may not necessarily reproduce the full detail and the exact shape of the parts or depict the actual models, but are intended for reference only.

### *Direction Reference*

All reference to right and left, forward or rearward, are from the operator's seat, facing the steering wheel.

*To assist your dealer in handling your needs, please record hereafter the model number and serial number of your equipment and tractor. It is also advisable to supply them to your insurance company. It will be helpful in the event that an equipment or tractor is lost or stolen.*

| | **TRACTOR** | **IMPLEMENT** |
|---|---|---|
| MODEL : | | |
| SERIAL NUMBER : | | |
| DATE OF PURCHASE : | | |
| DEALER NAME: | | |

# SAFETY PRECAUTIONS

## SAFETY FIRST

This symbol, the industry's "Safety Alert Symbol", is used throughout this manual and on labels on the machine itself to warn of the possibility of personal injury. Read these instructions carefully. It is essential that you read the instructions and safety regulations before you attempt to assemble or use this unit.

**DANGER :** Indicates an immediately hazardous situation which, if not avoided, will result in death or serious injury.

**WARNING :** Indicates a potentially hazardous situation which, if not avoided, could result in death or serious injury.

**CAUTION :** Indicates a potentially hazardous situation which, if not avoided, may result in minor or moderate injury.

**IMPORTANT :** Indicates that equipment or property damage could result if instructions are not followed.

**NOTE :** Gives helpful information.

All products are designed to give safe, dependable service if they are operated and maintained according to instructions. **Read and understand this manual before operation**. It is the owner's responsibility to be certain anyone operating this product reads this manual, and all other applicable manuals, to become familiar with this equipment and all safety precautions. Failure to do so could result in serious personal injury or equipment damage. If you have any questions, consult your dealer.

## BEFORE OPERATION

### *Children*

Tragic accidents can occur if the operator is not alert to the presence of children. Children are generally attracted to machines and the work being done. Never assume children will remain where you last saw them.

1. Keep children out of the operating area and under the watchful eye of another responsible adult.
2. Be alert and turn machine off if children enter the work area.
3. Before and when backing, look behind for small children.
4. Never carry children while operating the machine. They may fall off and be seriously injured or interfere with the safe operation of the machine.
5. Never allow children to play on the machine or attachment even when they are turned off.
6. Never allow children to operate the machine even under adult supervision.
7. Use extra care when approaching blind corners, shrubs, trees, or other obstructions that might hide children from sight.

# SAFETY PRECAUTIONS

## NOTICE

A safe operator is the best assurance against accidents. All operators, no matter how experienced they may be, should read this operator's manual and all other related manuals before attempting to operate an equipment. Please read the following section and pay particular attention to all safety recommendations contained in this manual and those labelled on the equipments and on the tractor.

## THE DEBRIS BLOWER

### *Before Operation*

**1.** Read and understand this operator's manual and tractor operator's manual. Know how to operate all controls and how to stop the unit and disengage the controls quickly.

**2.** Never wear loose, torn, or bulky clothing around the tractor and debris blower. It may catch on moving parts or controls, leading to the risk of accident.

**3.** Clear the area of people, animals and large debris before commencing operation.

**4.** Make sure the drive system is disengaged into neutral before starting the engine.

**5.** Keep all shields in place and all mounting hardware properly tightened.

**6.** Periodically, inspect all moving parts for wear and replace with genuine parts if an excessive amount of wear is present.

**7.** Never attempt to make any adjustments while engine is running. Read this manual carefully to acquaint yourself with the equipment as well as the tractor operator's manual. Working with unfamiliar equipment can lead to accidents. Be thoroughly familiar with the controls and proper use of the equipment.

**8.** Do not modify or alter this equipment or any of its components, or any equipment function without first consulting your dealer.

**9.** Replace all missing, illegible, or damaged safety and warning decals. See list of decals in the operator's manual.

**10.** Keep safety decals clean of dirt and grime.

## ***Debris Blower Operation***

**1.** Never allow anyone to operate the equipment until they are thoroughly familiar with basic tractor and debris blower operation.

**2.** Never operate the debris blower without good visibility and lighting.

**3.** Always make sure all debris blower components are properly installed and securely fastened BEFORE operating.

**4.** Do not make mechanical adjustments while the unit is in motion, the debris blower is raised, or the engine is running.

**5.** Do not put hands or feet near rotating parts. Keep clear of air blast nozzle opening at all time. Do not enter hands or feet into air blast nozzle opening.

**6.** Never allow anyone to sit, stand or ride on the debris blower at any time.

**7.** Always keep the equipment air blast directed away from people, animals and objects that could be struck by debris. Keep a careful watch for small debris that could enter the blower while operating.

**8.** Never clean or adjust PTO-driven equipment with the tractor engine running,

**9.** Never operate the equipment without guards, shields and other safety protective devices in place.

**10.** Before leaving the tractor unattended, take all necessary precautions. Disengage the PTO, shift into neutral, set the parking brake, stop the engine and remove the ignition key.

**11.** Exercise extreme caution when operating on or crossing a gravel drive, walks, or roads. Stay alert for hidden hazards or traffic. Do not carry passengers.

**12.** Do not run the engine indoors except when starting engine and transporting attachment in or out of building. Carbon monoxide gas is colorless, odorless and deadly.

**13.** If the debris blower should start to vibrate abnormally, stop the engine immediately and check for the cause. Vibration is generally a warning of trouble.

**14.** Exercise extreme caution when changing direction on slopes. Do not attempt to operate on steep slopes or near embankments.

**15.** Never operate machine at high transport speeds on a slippery surface.

**16.** Use extra caution when backing up.

**17.** Prolonged exposure to loud noise can cause impairment or loss of hearing. Wear a suitable hearing protective device such as earmuffs or earplugs to protect against objectionable or uncomfortable noises.

**18.** Always wear eye protection during operation (face shield, etc.)

**19.** Make sure the tractor is counterweighted as recommended by your dealer. Weights provide the necessary balance to prevent tip-over or loss of traction or steering.

## THE TRACTOR

### *General Information*

1. Read the operator's manual carefully before using tractor. Lack of operating knowledge can lead to accidents.
2. Do not permit anyone but the operator to ride on the tractor. There is no safe place for extra riders.

### *Operating the Tractor*

1. Never allow anyone to operate the debris blower until they are thoroughly familiar with basic tractor and debris blower operation.
2. Do not allow anyone to ride on the tractor/equipment at any time. There is no safe place for passengers on this equipment. The operator MUST sit in the tractor seat.
3. Never allow anyone in front of unit.
4. Always make sure all components are properly installed and securely fastened BEFORE operation.
5. Make sure the driveline guard is installed when using PTO-driven equipment and always replace the guard if damaged.
6. Never start the engine while standing beside the tractor. Always sit on the tractor operator's seat while starting the engine or operating controls.
7. Set the parking brake, wait for all movement to stop, lower the equipment to the ground, shut off the engine and remove the key BEFORE leaving the operator’s seat. The operator must never get off the tractor while it is motion.
8. Never run the tractor engine in a closed building without adequate ventilation, as the exhaust fumes are very dangerous.
9. Never allow an open flame near the fuel tank or battery.
10. Handle fuel with care, as it is highly flammable.
11. Use approved fuel container.
12. Never add fuel to a running engine or a hot engine.
13. Fill fuel tank outdoors with extreme care. Never fill fuel tank indoors. Replace fuel cap securely and wipe up spilled fuel.
14. Never park the tractor on a steep slope.
15. Exercise extreme caution when changing direction on slopes. Do not attempt to clear steep slopes.
16. Use care when operating on steep grades to maintain proper stability.
17. Keep the tractor in gear when going downhill.
18. Always drive the tractor at speeds compatible with safety, especially when operating over rough ground, crossing ditches, or when turning.
19. Make sure the tractor is counterweighted as recommended by your dealer. Weights provide the necessary balance to prevent tip-over or loss of traction or steering.
20. Eye and hearing protection is recommended when operating the equipment.
21. Operate only during daylight hours, or when the area is well lit with bright artificial light.
22. Inspect the equipment after striking any foreign object to assure that all equipment parts are safe and secure and not damaged.

## MAINTENANCE

**ALWAYS USE GENUINE PARTS WHEN REPLACEMENT PARTS ARE REQUIRED**

1. Park the tractor/equipment on level ground, set the parking brake, lower the equipment to the ground, shut off the engine and remove the key BEFORE making any equipment adjustments.
2. Provide adequate blocking before working under the debris blower when in raised position.
3. Never park the tractor with fuel in the fuel tank inside a building where an open flame or sparks are present. Allow the engine to cool down before leaving it in any enclosure.
4. Keep the tractor/equipment clean. Environmental build-up can lead to malfunction or serious personal injury.
5. Always wear eye protection when cleaning or servicing the equipment.
6. Do not modify or alter this equipment or any of its components or operating functions. If you have questions concerning modifications, consult your dealer.

## TRANSPORTING

1. If the tractor/equipment is to be driven on public roads, it must be equipped with an SMV (Slow Moving Vehicle) sign. Check local traffic codes that may apply to unit usage on public roads and highways in your area.
2. Be alert for all other traffic when driving the tractor/equipment on public roads or highways.
3. Disengage power to equipment when transporting or when not in use.

## STORAGE

1. Before storing the debris blower certain precautions should be taken to protect it from deterioration:
2. Clean the debris blower thoroughly.
3. Make all the necessary repairs.
4. Replace all Safety Signs that are damaged, lost, or otherwise become illegible. If a part to be replaced has a sign on it, obtain a new safety sign from your dealer and install it in the same place as on the removed part.
5. Repaint all parts from which paint has worn or peeled.
6. When the debris blower is dry, oil all moving parts. Apply oil liberally to all surfaces to protect against rust.

**CAUTION: Do not allow oil or grease on the drive belt and pulleys.**

# DECALS

**Replace Immediately if Damaged**

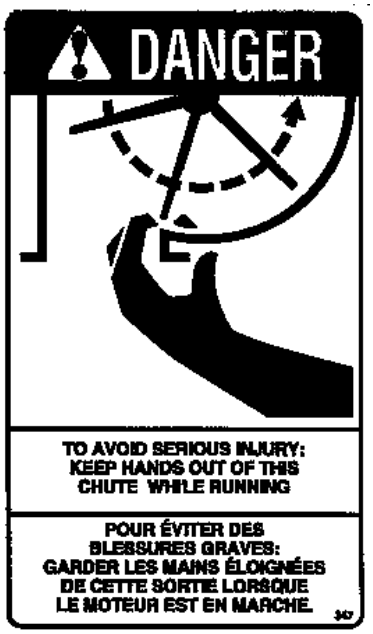


665132

660989

660988

661249

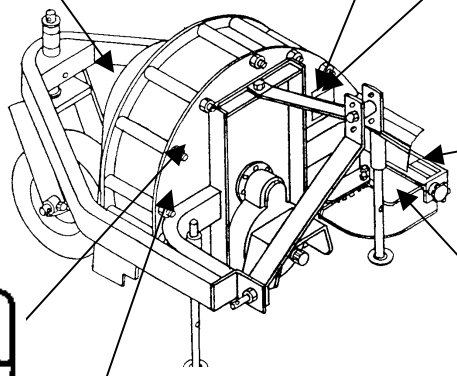

661571

662647

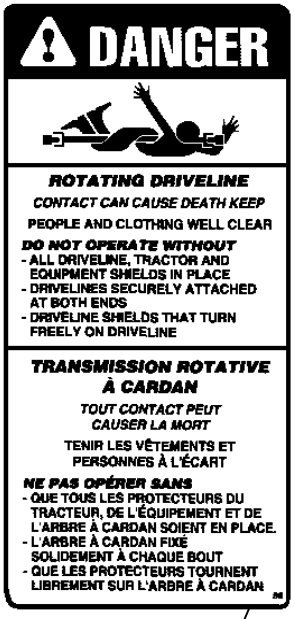


656781

662712

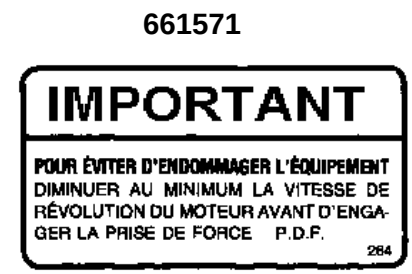


661570

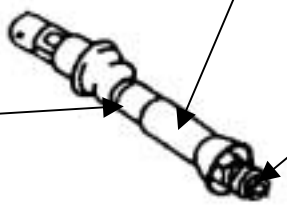

2500652
Attached to driveline

## ATTACHING THE DEBRIS BLOWER

### IMPORTANT:

A proper initial installation will give you years of satisfactory service on your equipment. Please read carefully following instructions that have been specially included to help you and ensure you are satisfied with your purchase.

1. **Figure 1:** Insert the nozzle rotation handle (item 1) through the handle support (item 2) and inside rotation tube (item 3). Lock in place with a 10-24 x 1" allen capscrew and a nylon lock nut. Do not tighten.
2. **Figure 2:** Attach tractor upper and lower links to blower attaching frame (item 1). Adjust anti-sway blocks and upper link so that the main frame is level.
3. Raise blower approximately 1" off the ground.
4. Turn engine off, set parking brake, remove ignition key.
5. **Figure 2:** Set parking stands (item 2) in raised position by placing hair pin on upper side of stand support.

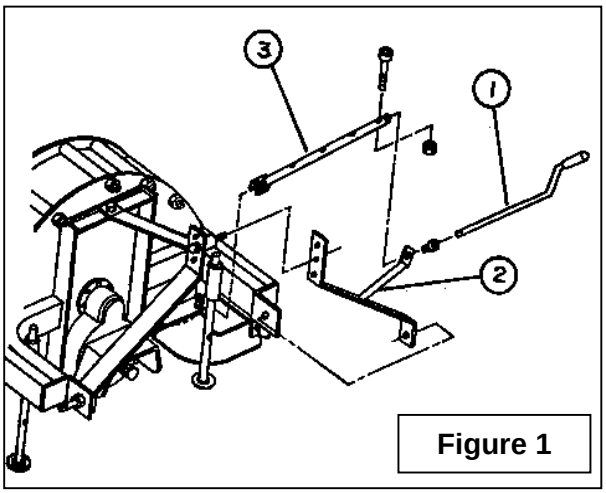

Figure 1

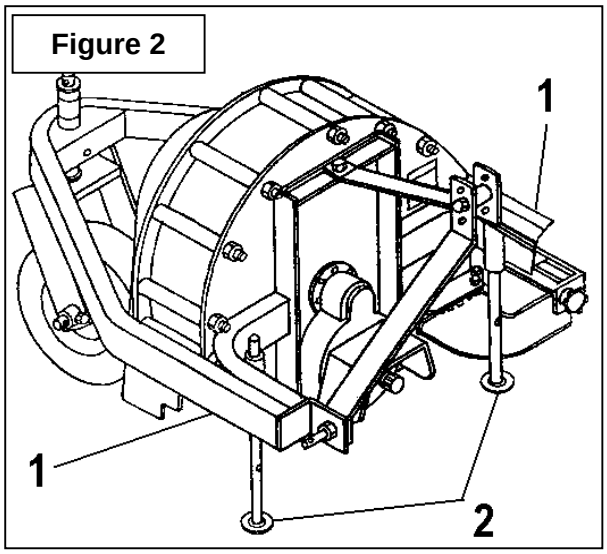

Figure 2

### *Determining Driveline Length*

**IMPORTANT:** Before using the equipment, make sure the driveline is not too long. At working position, the two half drivelines must intersect each other sufficiently to insure maximum efficiency but there must not be any interference.

**WARNING: NEGLECTING TO ADJUST THE "L" LENGTH OF DRIVELINE CAN CAUSE SERIOUS DAMAGES AND VOID YOUR WARRANTY.**

**NOTE: Do not perform the following procedure with the driveline installed.**

1. To determine the **"L"** length for your tractor model you must first find the **"X"** value by measuring the distance between the end of the tractor's drive shaft and the end of the debris blower's driven shaft when the snowblower is in transport position as shown on Figure 3.
2. Take the **"Y"** factor indicated in the table below and deduct that number from **"X"** to determine **"L"** which is the center-to-center length between the universal joints.

| L = X – Y | |
|---|---|
| 3 PTS HITCH CATEGORY | Y |
| Cat. 1 | 4 1/2" |

3. Hold the two half-shaft side by side and locate the "L" length between the two center-to-center half-shaft universal joints. Mark off the zone to be cut on both halves opposite each half-shaft guard as shown on Figure 4.
4. Cut off inner and outer guard tubes.
5. Cut the same width "A" from the inner and outer telescopic sections as was cut from the inner and outer guard tubes as shown on Figure 5.
6. File down tubes and remove chips.
7. Apply grease inside the outer telescopic section.

**IMPORTANT:** Work with fully guarded shafts only!

8. Connect driveline to tractor PTO shaft.

**WARNING: This shaft turns at very high RPM. If the collar is not locked to shaft in gearbox, or if the yoke at the tractor end is not secured properly, the driveline can fly loose with great force capable of causing serious injury or death.**

9. Adjust rotation handle length so that it is convenient to the operator when the blower is fully raised.
10. Check and adjust all adjustment settings and maintenance.

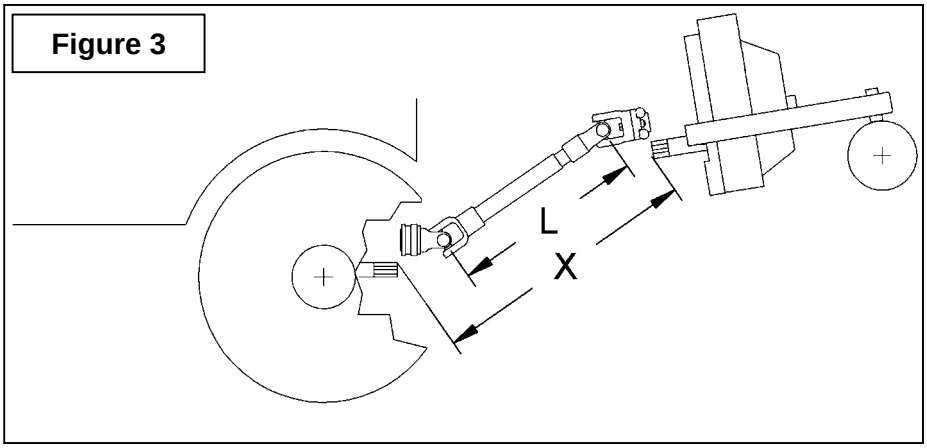

Figure 3

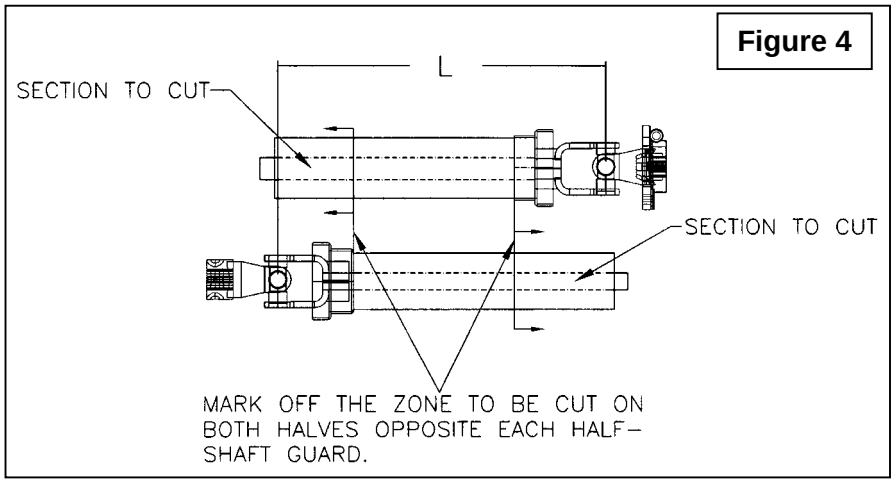

Figure 4

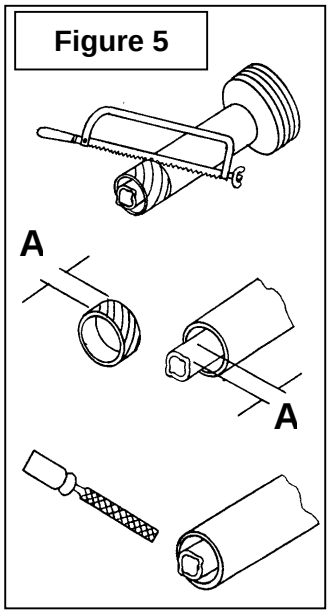

Figure 5

## OPERATING CONTROLS

### *Manual Nozzle Rotation*

The nozzle (fig.6, item 1) can be rotated 230°**.** Set direction of the nozzle by turning the handle clockwise to rotate nozzle toward tractor or counterclockwise to rotate nozzle away from tractor.

### *Engaging & Disengaging Blower*

Refer to tractor operator's manual for proper instructions on PTO operation and adjustments.

### *Optional Hydraulic Nozzle Rotation*

Use the auxiliary valve handle: when pushed forward the nozzle rotates in a counterclockwise direction to the left, and when pulled back the nozzle rotates to the right in a clockwise direction.

### *Optional Electric Nozzle Rotation*

Placing the toggle forward rotates the nozzle toward the tractor. Placing the toggle backward rotates the nozzle away from the tractor. If movements are different simply reverse motor lead wires.

### *Optional Electric Nozzle Deflector*

Placing the toggle forward lowers the deflector (fig.6, item 2). Placing the toggle to the rear raises the deflector. (If movements are different simply reverse actuator lead wires).

## ADJUSTMENTS

**WARNING: Before making any adjustment, turn engine off, set parking brake, remove ignition key and wait for all movements to stop.**

### *Nozzle Deflector*

To adjust the deflector (fig.6, item 2), loosen knob, select angle and fasten knob securely.

### *Front Gauge Wheel*

Set gauge wheel (fig.6, item 3) height according to surface conditions (make sure nozzle clears the ground in all conditions). To set height, remove linchpin from wheel bracket, place the sleeve spacers either on upper or lower side of blower frame, and reinstall the linchpin.

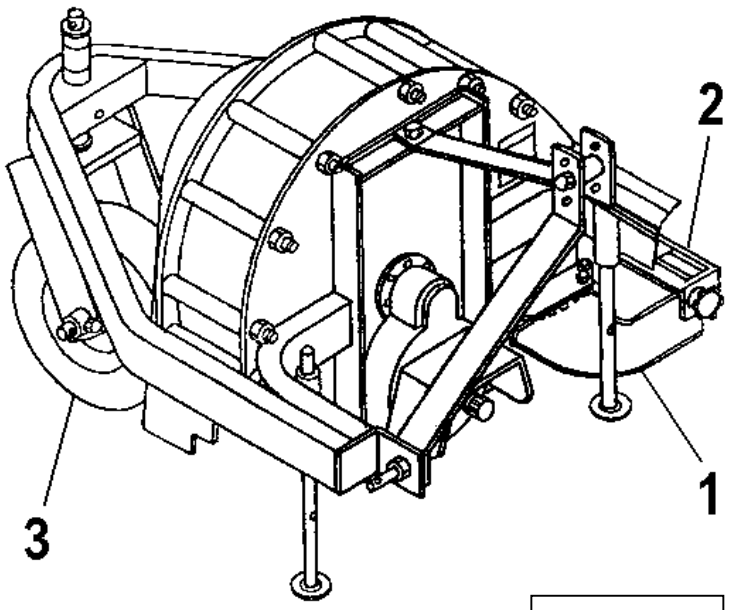


Figure 6

## ***Air Flow Adjuster***
***(Figure 7)***

The debris blower is equipped with an air flow adjuster which controls the amount of air entry. This device is located on the front of the unit, and it was designed to protect the tractor's motor. It is recommended that the tractor's motor revolution does not go lower than 600 R.P.M. when the debris blower is in operation. If the tractor's motor goes under 600 R.P.M., you must move the air flow adjuster closer to the cone to reduce the amount of air entry.

Remove the round wire lock pin, push the adjuster in the preceding adjustment hole and reinstall the round wire lock pin. There are three adjustment holes.

**NOTE:** The closer the adjuster is from the cone, the less the tractor's motor is solicited thus, the air flow is reduced

***Figure 7***

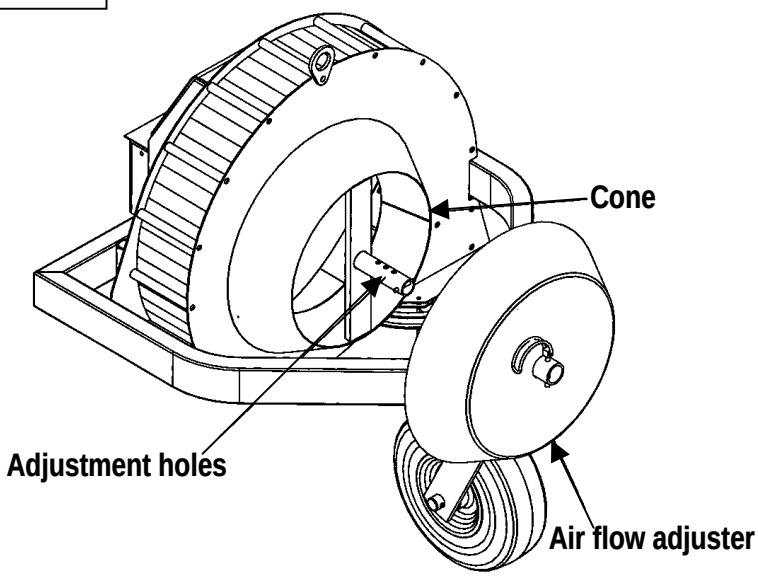

### *Tire Pressure*

Inflate to 20 psi and check daily.

### *Hydraulic Lines (If equipped)*

Check hoses for leaks using cardboard every 100 hours of operation or monthly.

## LUBRICATION

### *Air Blast Nozzle*

Oil the base every 24 hours of operation.

### *Front Wheel*

Grease the fitting every 8 hours of operation.

### *Gearbox*

Check oil level by side plug (fig.8, item 1) every 40 hours of operation or monthly. Make sure oil is up to the level plug, if not add SAE 90 oil. Replace oil every 100 hours of operation or yearly.

### *Driveline*

Grease each u-joint fitting every 8 hours of operation. Slide drive shaft apart and coat sliding surfaces with grease every 24 hours of operation.

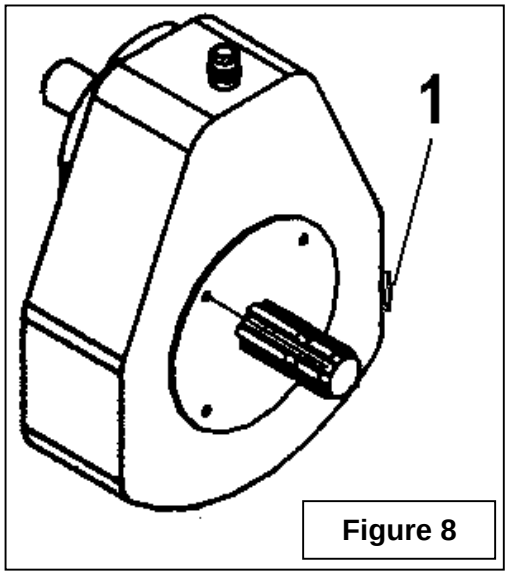


Figure 8

## REMOVING DEBRIS BLOWER

1. Raise blower approximately 2" from ground. Stop engine, set parking brake and remove ignition key.
2. Carefully set parking stands in most extended position by placing hairpins on underside stand supports.
3. Set blower in float position and relieve hydraulic pressure.
4. Disconnect driveline from tractor PTO shaft and option(s) wires & hoses (if equipped).
5. Disconnect tractor upper and lower hitch arms from blower. Move tractor away from attachment.

# PARTS

## INTRODUCTION

All parts are illustrated in "exploded views" which show the individual parts in their normal relationship to each other. Reference numbers are used in the illustrations. These numbers correspond to those in the "Reference Number" (REF) column, and are followed by the description and quantity required.

O/L - "Obtain Locally" in the part number column indicates common hardware that is available at your local hardware supply.

All reference to right and left, forward or rearward from the operator's view standing behind the machine.

Orders must give the complete description, correct part number, the total amount required, the serial number, the method of shipment and the shipping address.

The manufacturer reserves the rights to change, modify, or eliminate from time to time, for technical or other reasons, certain or all data, specifications, or the product or products themselves, without any liability or obligation.

The parts listed here are available through your local dealer.

## THREE POINT HITCH DEBRIS BLOWER

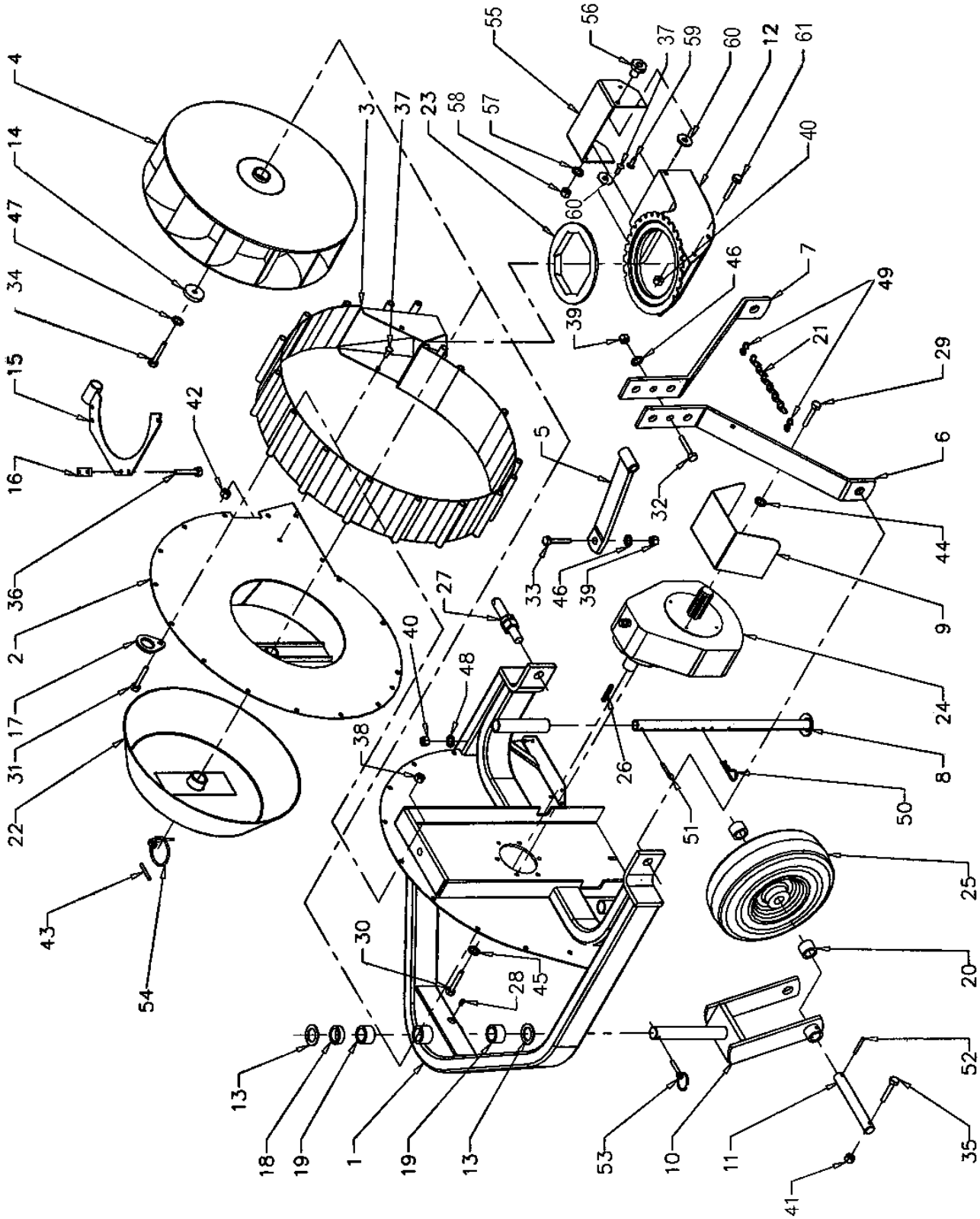

## THREE POINT HITCH DEBRIS BLOWER

| REF. | DESCRIPTION | QTY | PART # |
|---|---|---|---|
| 1 | Housing | 1 | 661105 |
| 2 | Intake cover | 1 | 665393 |
| 3 | Impeller housing | 1 | 661112 |
| 4 | Impeller | 1 | 661111 |
| 5 | Upper hitch | 1 | 661109 |
| 6 | Hitch arm –left | 1 | 661123 |
| 7 | Hitch arm –right | 1 | 661720 |
| 8 | Parking stand | 2 | 661121 |
| 9 | Driveline guard | 1 | 661120 |
| 10 | Wheel bracket | 1 | 661127 |
| 11 | Wheel pin | 1 | 660484 |
| 12 | Air blast nozzle | 1 | 661098 |
| 13 | Wheel flat washer | 2 | 660486 |
| 14 | Fan flat washer | 1 | 661204 |
| 15 | Retaining plate | 1 | 661496 |
| 16 | Spacer | 4 | 661498 |
| 17 | Hoisting plate | 1 | 662604 |
| 18 | Sleeve spacer 1/2" | 1 | 661117 |
| 19 | Sleeve spacer 1" | 2 | 661118 |
| 20 | Shim | 2 | 661119 |
| 21 | Chain 8 1/2" | 1 | 661222 |
| 22 | Air flow adjuster | 1 | 665209 |
| 23 | Anti-friction ring | 1 | 657338 |
| 24 | Gearbox | 1 | 664533 |
| 25 | Wheel and tire ass'y | 1 | 660658 |
| 26 | Key 5/16" x 5/16" x 1 3/4" | 1 | 661166 |
| 27 | Hitch pin | 2 | 654196 |
| 28 | Grease fitting 1/4"NF | 1 | 654106 |
| 29 | Hex. bolt M10 x 1.50 x 16mm | 2 | 0200011 |
| 30 | Hex. bolt M8 x 1.25 x 20mm | 6 | 0200006 |
| 31 | Hex. bolt 3/8" NC x 6 1/2" | 17 | O/L |
| 32 | Hex. bolt 5/8" NC x 3 3/4" | 1 | O/L |
| 33 | Hex. bolt 5/8" NC x 1 3/4" | 1 | O/L |
| 34 | Hex. bolt 3/8" NC x 1 1/2" | 1 | O/L |
| 35 | Hex. bolt 1/4" NC x 2" | 1 | O/L |
| 36 | Hex. bolt 1/4" NC x 1" | 8 | O/L |
| 37 | Carriage bolt 5/16" NC x 3/4" | 3 | 0300002 |
| 38 | Flange nut 3/8" NC | 17 | O/L |
| 39 | Hex. nut 5/8"NC | 2 | O/L |
| 40 | Hex. nut 1/4" NC | 12 | O/L |
| 41 | Nylon hex. nut 1/4" NC | 1 | O/L |
| 42 | Flange nut 5/16" NC | 2 | O/L |
| 43 | Spring pin 1/4" x 2" | 1 | O/L |

## THREE POINT HITCH DEBRIS BLOWER

| REF. | DESCRIPTION | QTY | PART # |
|---|---|---|---|
| 44 | Lockwasher 10mm | 2 | 1200018 |
| 45 | Lockwasher 8mm | 6 | 1200017 |
| 46 | Lockwasher 5/8" | 2 | O/L |
| 47 | Lockwasher 3/8" | 1 | O/L |
| 48 | Lockwasher 1/4" | 8 | O/L |
| 49 | "S" hook .140 x 1 1/2" | 2 | 2000002 |
| 50 | Hairpin 5mm x 100mm | 2 | 1800003 |
| 51 | Cotter pin 5/32" x 1 1/2" | 2 | O/L |
| 52 | Spring pin 1/4" x 1 1/2" | 1 | O/L |
| 53 | Linchpin 5/16" | 1 | O/L |
| 54 | Round wire lock pin 5/16" x 2 5/8" | 1 | 659095 |
| 55 | Deflector | 1 | 661100 |
| 56 | Knob 5/16" NC | 1 | 657309 |
| 57 | Nylon flat washer 11/32" | 1 | 658467 |
| 58 | Nylon hex. nut 5/16" | 1 | O/L |
| 59 | Carriage bolt 5/16" NC x 1" | 1 | 0300003 |
| 60 | Nylon flat washer 7/16" | 2 | 658468 |
| 61 | Hex. bolt 1/4" NC x 1/2", PTD | 4 | O/L |

## GEAR BOX (664533)

| REF. | DESCRIPTION | QTY. | PART # |
|---|---|---|---|
| 1 | Pinion shaft | 1 | 661088 |
| 2 | Bearing | 3 | 659844 |
| 3 | Spacer | 1 | 661089 |
| 4 | Bolt M10 x 18 | 6 | ---- |
| 5 | Oil filler plug 3/8" | 1 | 656662 |
| 6 | Gear | 1 | 661087 |
| 7 | Plug 3/8"gas | 2 | 661265 |
| 8 | Shaft | 1 | 661086 |
| 9 | Oil seal | 2 | 659845 |
| 10 | Snap ring | 2 | 656654 |
| 11 | Parallel key | 1 | 661092 |
| 12 | Bearing | 1 | 661090 |

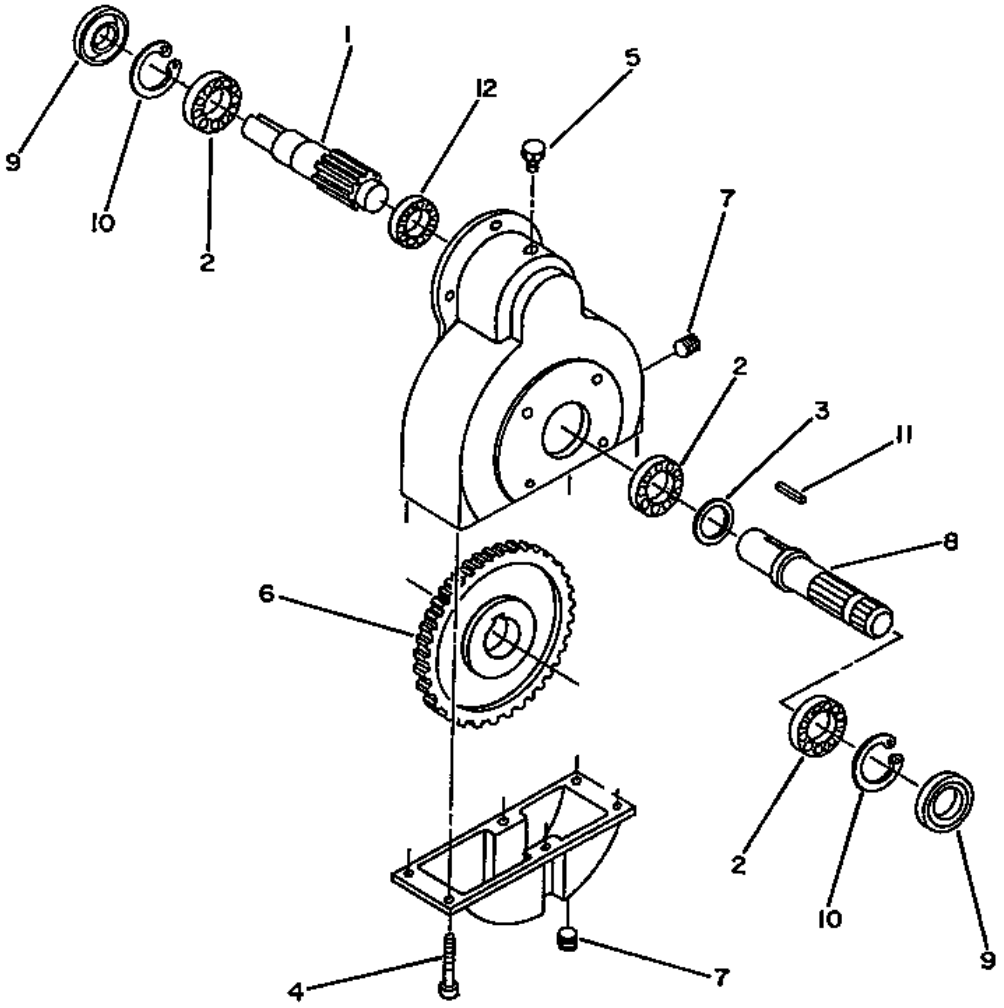

## DRIVELINE - 4700159

| REF. | DESCRIPTION | QTY | PART # |
|---|---|---|---|
| 1 | Yoke ass'y | 1 | 660764 |
| 2 | Journal cross | 2 | 660765 |
| 3 | Yoke for female tube | 1 | 663189 |
| 4 | Female tube | 1 | 4700160 |
| 5 | Male tube | 1 | 4700161 |
| 6 | Yoke for male tube | 1 | 663193 |
| 7 | Yoke ass'y | 1 | 4700058 |
| 8 | Bolt M12 x 1.25 x 70 with nut | 2 | 662199 |
| 9 | Grease fitting | 1 | 663129 |
| 10 | Ball Ø1/4" | 23 | 663163 |
| 11 | Shear bolt 8mm x 1.25 x 50 gr.5.8 and nut | 1 | 4700060 |
| 12 | Protector and chain | 1 | 4700164 |
| 13 | Pin for outer tube | 1 | 4700061 |
| 14 | Pin for inner tube | 1 | 4700062 |

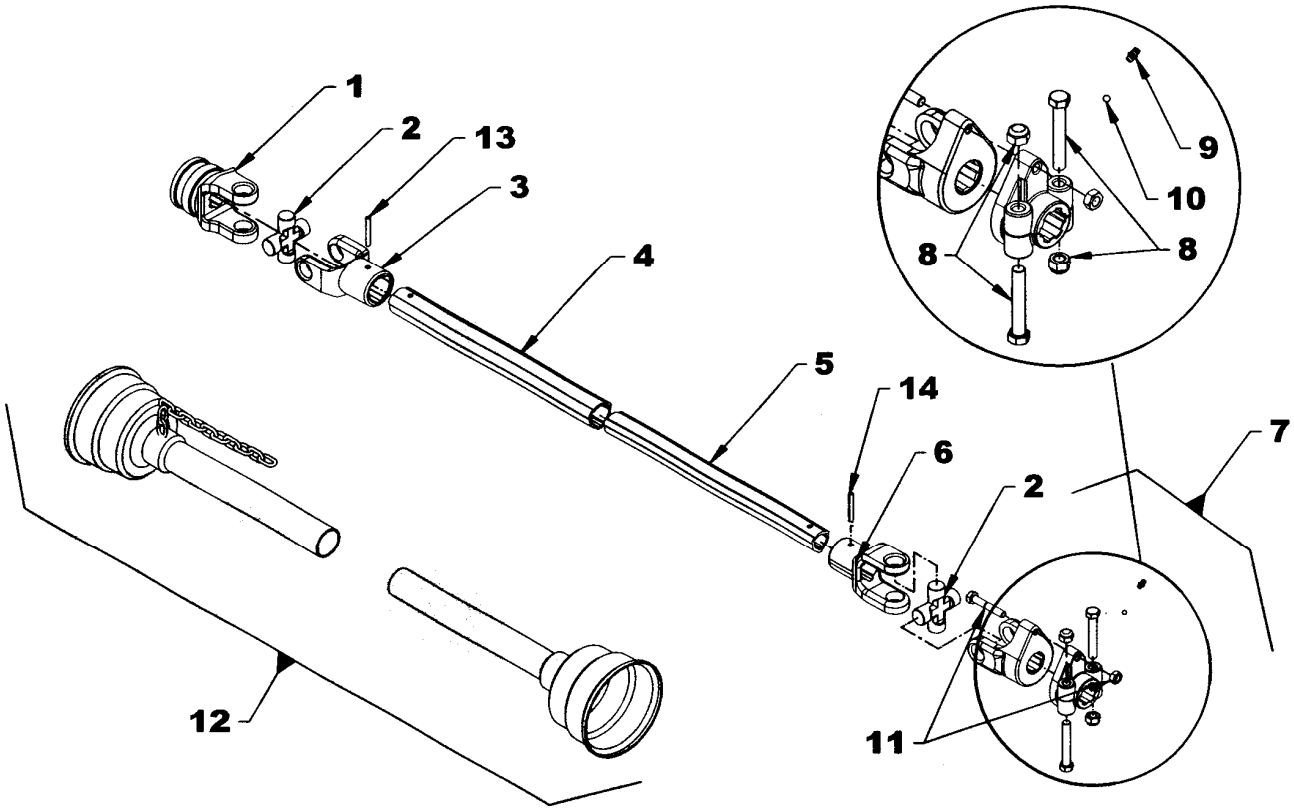

# WARRANTY

RADTECH warrants to the original buyer that the equipment is free from defects in material and workmanship. RADTECH's obligation, under this warranty, will be limited to the repair or replacement of any non-wear part or component, which RADTECH finds to be defective within **one year** from the date of original purchase (unless otherwise-specified). The applicable warranty period for commercial or rental use shall be ninety (90) days from the date of purchase

In no event shall RADTECH be liable for consequential, special, direct or indirect damages incurred by the buyer/user.

All components not manufactured by RADTECH (such as motors, actuators, hydraulic components, tires, ...etc.) are covered by the original manufacturer's warranty in conjunction with RADTECH

RADTECH's obligation under this warranty shall be limited to repairing or replacing, free of charge to the original purchaser, any part that, in RADTECH's judgment, shall show evidence of such defect, provided the **distributor** returns the part prepaid within thirty (30) days from date of failure.

This warranty shall not be interpreted to render RADTECH liable for injuries or damages of any kind or nature to person or property. This warranty does not extend to losses because of delays, or to any expenses or losses incurred for labor, substitute machinery, rental or for any other reason.

Except as set forth above, RADTECH shall have no obligation or liability of any kind on account of any of its equipment and shall not be liable for special or consequential damages. RADTECH makes no other warranty, expressed or implied, and specifically, RADTECH disclaims any implied warranty or merchantability or fitness for a particular purpose**. Some states or provinces do not permit limitations or exclusions of implied warranties or incidental or consequential damages, so the limitations or exclusions in this warranty may not apply.**

This warranty is subject to any existing conditions of supply, which may directly affect our ability to obtain materials or manufacture replacement parts. RADTECH reserves the right to make improvements in design or changes in specifications at any time, without incurring any obligation to owners of units previously sold.

No one is authorized to alter, modify or enlarge this warranty nor the exclusions, limitations and reservations.

***2835 Chemin de l'Aéroport, Thetford Mines (Québec) G6G 5R7***

*Tel.: (418) 338-4499 Fax: (418) 388-6090*
*Internet : www.radinter.com e-mail : radtech@radinter.com*

**MANUAL NOZZLE ROTATION**

**9484**

**ELECTRIC NOZZLE ROTATION**

**9480**

**HYDRAULIC NOZZLE ROTATION**

**8044**

**ELECTRIC DEFLECTOR**

**9370**

# TORQUE SPECIFICATION TABLE

| ***GENERAL SPECIFICATION TABLE*** Use the following torques when special torques are not given. Note: These values apply to fasteners as received from supplier, when dry. These values do not apply if lubricants are used. | | |
|---|---|---|
| **BOLT SIZES (SAE)** | **TORQUE** | |
| **INCHES** | **Pounds-Foot** | **Newton-Meters** |
| 1/4 | 5 | 7 |
| 5/16 | 10 | 14 |
| 3/8 | 20 | 27 |
| 7/16 | 25 | 41 |
| 1/2 | 88 | 119 |
| 5/8 | 165 | 224 |
| 3/4 | 297 | 403 |
| 9/16 | 121 | 164 |
| 7/8 | 440 | 597 |
| 1 | 638 | 865 |
| 1 1/8 | 840 | 1139 |
| 1 1/4 | 1180 | 1600 |
| 1 3/8 | 1570 | 2129 |
| 1 1/2 | 2070 | 2807 |

| **BOLT SIZES (METRIC)** | **TORQUE** | |
|---|---|---|
| **MILLIMETERS** | **Pounds-Foot** | **Newton-Meters** |
| M6 | 10 | 13 |
| M8 | 22 | 30 |
| M10 | 40 | 54 |
| M12 | 59 | 80 |
| M14 | 93 | 126 |
| M16 | 130 | 176 |
| M18 | 168 | 228 |
| M20 | 205 | 278 |

Manufactured by:

***RADTECH***
2835, Chemin de l'Aéroport
Thetford Mines, Québec, Canada, G6G 5R7
**TEl.: (418) 338-4499 - Fax: (418) 338-6090**
**E-mail:** radtech@radinter.com
**Internet:** www.radinter.com

Printed in Canada